LOMBARDINI U.S.A., Inc.
2150 Boggs Road
Bldg. 300 Suite 300
Duluth, GA 30136
PHONE: (404) 623-3554
FAX: (404) 623-8833

8LD-665-2

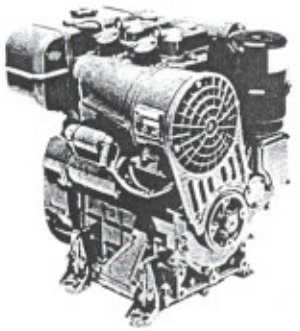

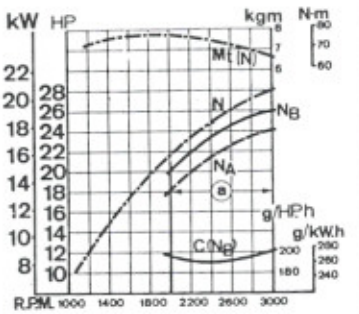

24 HP (NA RATING)

2000 - 3000 RPM

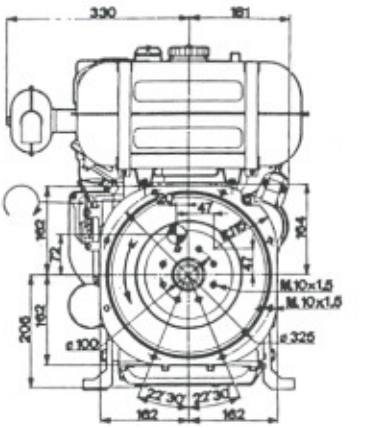

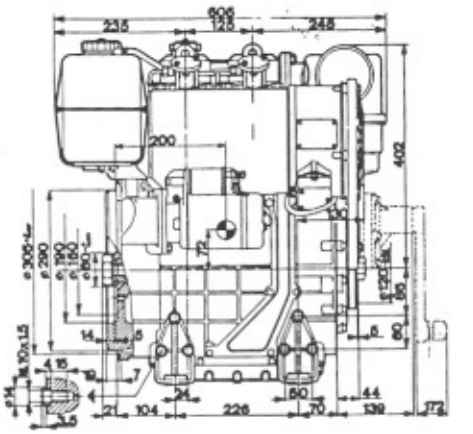

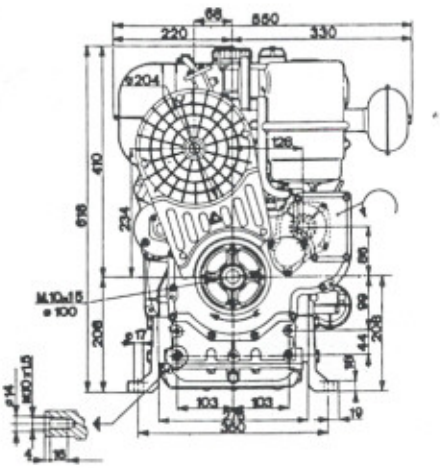

Model		8LD-665-2	
Cylinders		2	
Bore		3.74 INS.	95mm
Stroke		3.7 INS.	94mm
Displacement		81.28 INS.³	1332cm³
Compression ratio		17.8:1	
RPM		3000	
POWER HP	N DIN 70020	28.0	
	NB DIN 6270	26.0	
	NA DIN 6270	24.0	
Max. torque		56.4 ft lbs@1800	7.8 kgm. @ 1800
Fuel consumption		0.44 lbs/HP/hr.	200 g/HP/hr.
Oil sump capacity		2.64 QTS.	2.5 L.
Dry weight		290 lbs.	132 kg.

STANDARD INDUSTRIAL SPEC.

Four cycle air cooled diesel engine with oil filter, oil bath air cleaner, muffler, engine mounts, manual throttle and stop lever, manual compression release, electric starter, alternator, voltage regulator, instrument panel (with key switch, low oil pressure light and battery charging light), fuel lift pump, belt and blower guards, tool set, maintenance and parts manual.

DIN RATINGS

N AUTOMOTIVE RATING: Intermittent duty at variable speed and load. Rating only on request.

NB RATING NO OVERLOAD CAPACITY: For continuous light duty with constant speed and variable load.

NA CONTINUOUS RATING OVERLOAD CAPACITY: For continuous heavy duty with constant speed and load. (Ratings certified within 5% after run-in with standard air cleaner and muffler. Derating 1% with standard air cleaner and muffler. Derating 1% approx. every 100 m. altitude and 2% approx. every 5°C above 20°C).

a Continuous duty. For service beyond application limits, contact Lombardini.

GROUP 8.

Specifications subject to change without notice