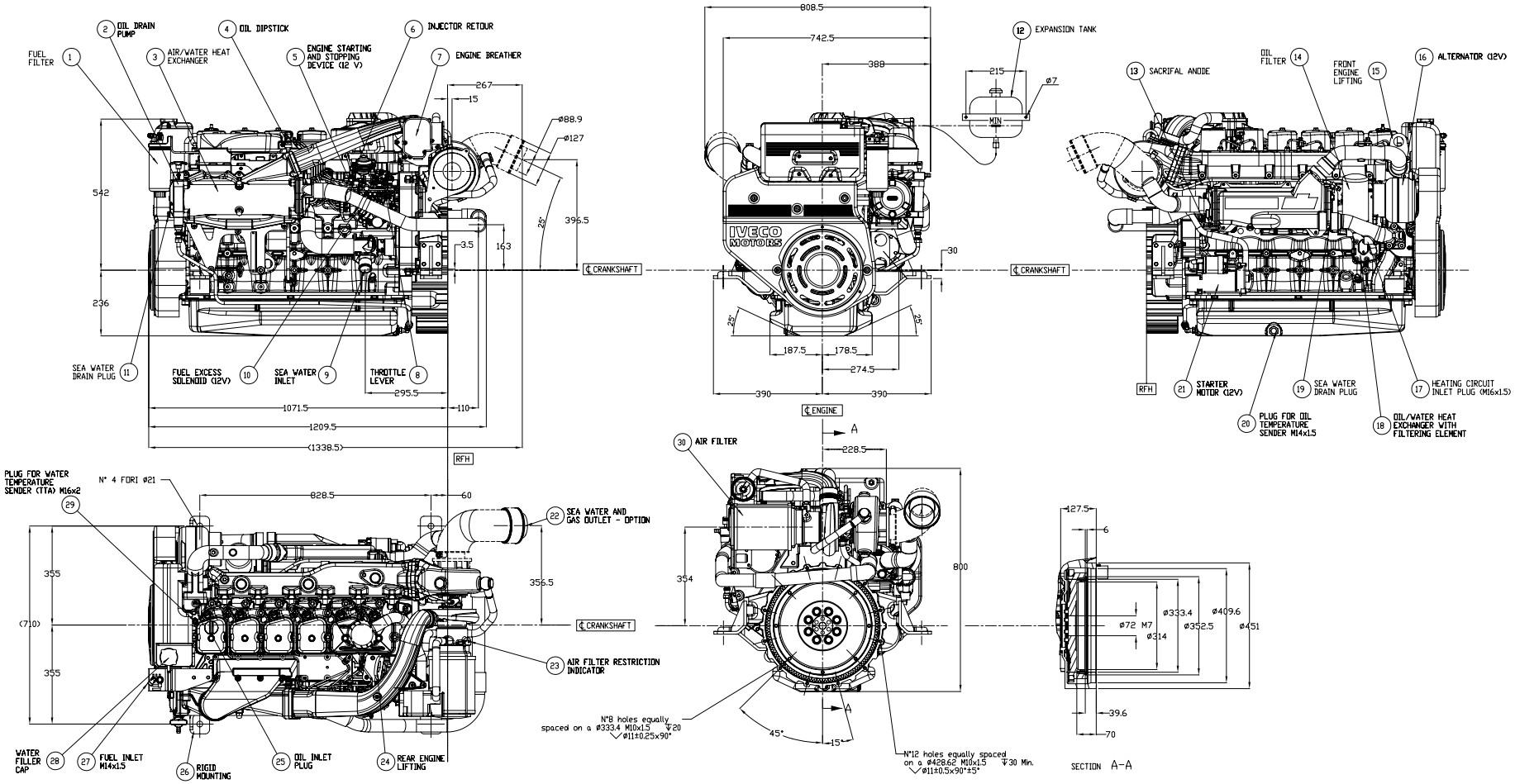

RHF = REAR FACE FLYWHEEL HOUSING

CAD DRAWING
HANDLING ON CAD SYSTEM ONLY

STANDARDS riferimenti vigenti/ref. mentioned

Scale: /
Materials Scale

Iveco 354 10-2001

ISO ≤ IT8
≤ ± 30'
Ra ≤ 0.4

Prescribed general Allgemeine Vorschriften General rules Iveco 354 10-2999

	Date	Name
Drawn by	29/09/04	UTS
Checked by		Pugnaroneti
Standards		Burgazzi
Approved	E135	Approved

Proprietà dell'Iveco S.p.A. Vietata riproduzione o copia della stessa. Il presente disegno non potrà essere utilizzato per fabbricazione, vendita, o richiesta di offerta, salvo autorizzazione scritta. Property of Iveco S.p.A. Reproduction or copy of this document is forbidden. This drawing may not be used for manufacturing, selling or requesting a quotation without written authorization.

Alle Eigentumsrechte der Iveco S.p.A. vorbehalten. Ohne unsere ausdrückliche Erlaubnis darf diese Zeichnung weder für Herstellung, die Angebotsanfrage oder Verkauf benutzt noch Dritten zugänglich gemacht werden. Jede Zuwiderhandlung wird Schadenersatzpflichtig.

All proprietary rights reserved by Iveco S.p.A. This drawing may not be used for manufacturing, selling or requesting a quotation nor be made available to third parties without written consent. Any infringement will be legally prosecuted.

Index Indice	Modification Notice	Code	Date Data	Name Nome
00	1-214616-032-135		01-12-04	F.T.

Materials/Werkstoff/Materiel | Standards | Code No

Nuova Ord. | Nr. Grezzo
Nuovo | Nr. Pezzo
Nuovi | Stück-Nr.

Designation/Benennung/Denomination | Lexicon Code 143340

ENGINE LAYOUT
FIGURINO MOTORE

Model/Modèle/Model
N67MNTM28.10

IVECO
Iveco SpA

No 8036595 DA 54-9857 | Sheet 1/1

Origin | Replaced for | Replaced by

Rev. 5 01 02 03 04 05 06 07 08 09 10

Rechtsvermerk/Nutzungsbedingungen