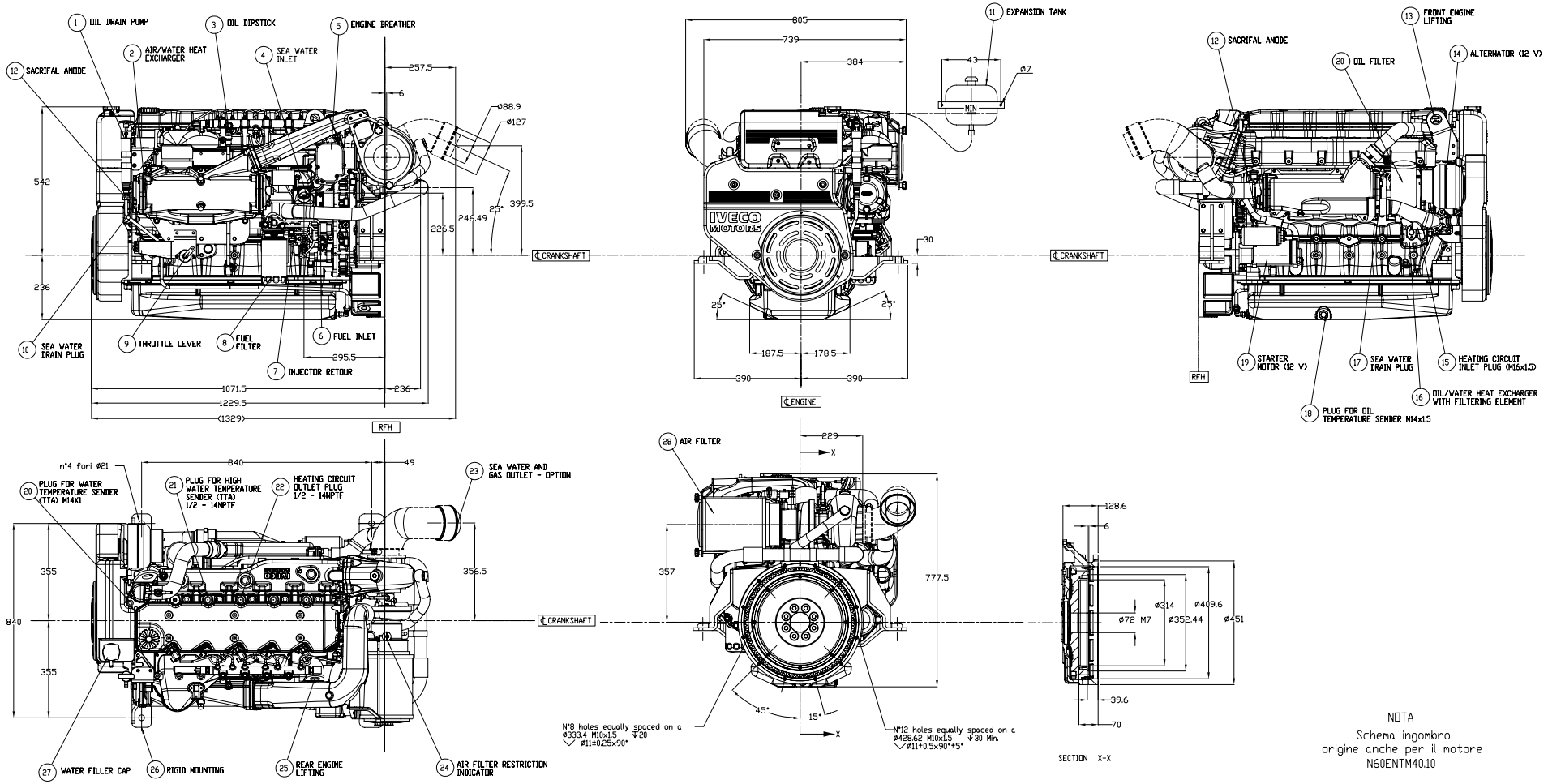

NOTA
Schema ingombro
origine anche per il motore
N60ENTM40.10

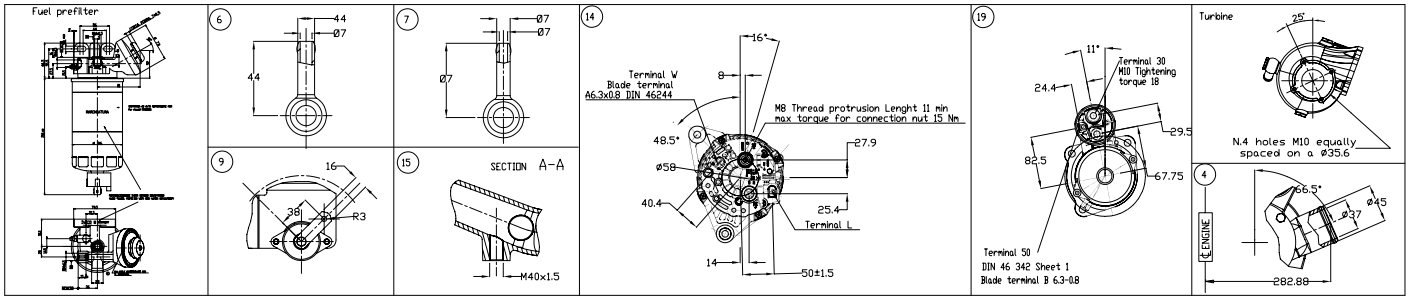

RFH = REAR FACE FLYWHEEL HOUSING

CAD DRAWING
HANDLING ON CAD SYSTEM ONLY

Scale / Maßstab / Scala				Materials/Werkstoff/Materiali	Standards / Code No
Iveco 354 10-2001	ISO ≤ IT8 ≤ ± 30' Ra ≤ 0.4				
Prescribed general Allgemeine Vorschriften General rules Iveco 354 10-2999				Nuova Ord. / Nr. Grezzo / Raw No. / Nuovo / Nr. Finito / Finish No. / Nuovo / Nr. Stato-No.	
	Data / Date	Name		Designazione/Benennung/Denomination	Lexicon Code 143340
Drawn by	01/10/04	UTS		ENGINE LAYOUT FIGURINO MOTORE	
Checked by		Pugnaroneti	00	1-214816-032-135	01-12-04 F.T.
Standards		Burgazzi	Indice / Index	Änderungs-Mitteilungen / Modification Notice Code	Data / Datum / Date Name / Name / Name
Approved	E135	Approved	Indice / Index		

Proprietà dell'Iveco S.p.A. Vietata riproduzione o trasmissione a terzi o altro uso senza il preventivo consenso scritto della proprietà, in tutto o in parte, di questo documento o copia o manoscritto. Il documento deve essere restituito a richiesta.

Alle Eigentumsrechte der Iveco S.p.A. vorbehalten. Weder das Ganze noch Teile dieser Unterlage dürfen ohne vorherige schriftliche Genehmigung weder vervielfältigt noch Dritten bekanntgemacht werden. Auf Aufforderung sind

All proprietary rights reserved by Iveco S.p.A. This drawing and its contents may not be copied or disclosed to any other party for the manufacture of the original or of any other component or part, nor may it be used for any purpose other than that for which it is loaned, without express consent. Any infringement will be legally

Modello/Model/Modèle: N60ENTM37.10

IVECO
Iveco SpA

No: 8033259 DA 54-9800

Sheet 1/1

Origine / Replaced for / Replaced by