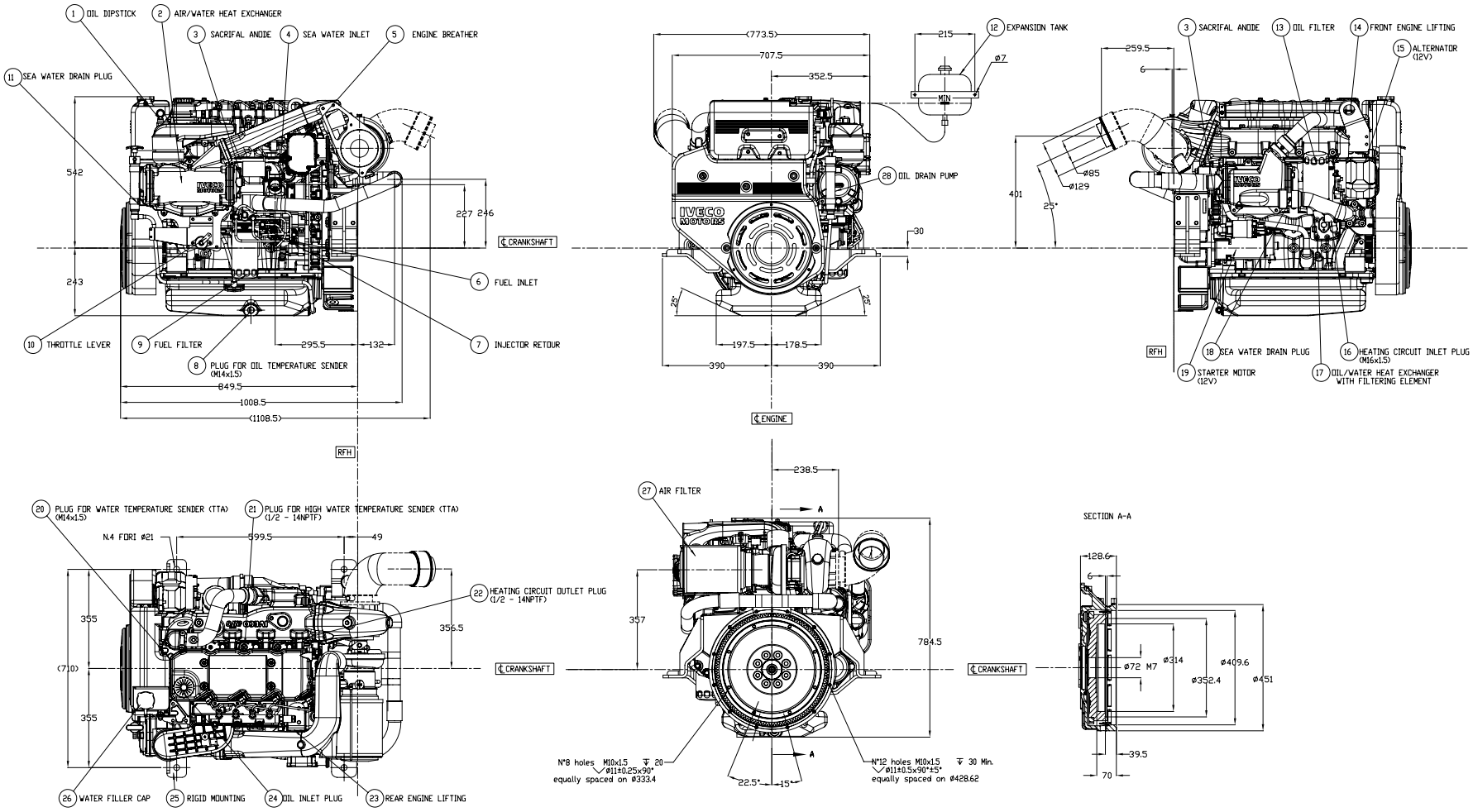

CAD DRAWING
HANDLING ON CAD SYSTEM ONLY

STANDARDS riferimenti vigenti/ref. mentioned

Scale / Massstab / Escala

Iveco 354 10-2001

Prescrizioni generali / Allgemeine Vorschriften / General rules / Iveco 354, 10-2001

ISO ∢ ITB ≤ ∢ 30' Ra ≤ 0.4

	Data	Name
Drawn by	29/09/04	UTS
Checked by		Pugnaroneti
Checkerb		Burgazzi
Approved	E135	Approved

Index	Modification Notice Code	Date	Name
00	1-214616-032-135	01-12-04	F.T.

Materiale/Werkstoff/Material | Standards | Code No

Nuova Ord. / Neu Gezeichnet / Nuovo / Neuf / Designation/Benennung/Denomination: Lenkrad Code 143340

ENGINE LAYOUT
FIGURINO MOTORE

Modello/Modell/Model: N40ENTM25.10

IVECO Iveco SpA

No 8035687 DA 54-9754 | Sheet 1/1

Origine | Replaced for | Replaced by

All proprietary rights reserved by Iveco S.p.A. This drawing and its contents may not be used, copied or disclosed for the manufacture of the components or of any item covered by this drawing nor related to other parties without prior written consent. Any infringement will be legally