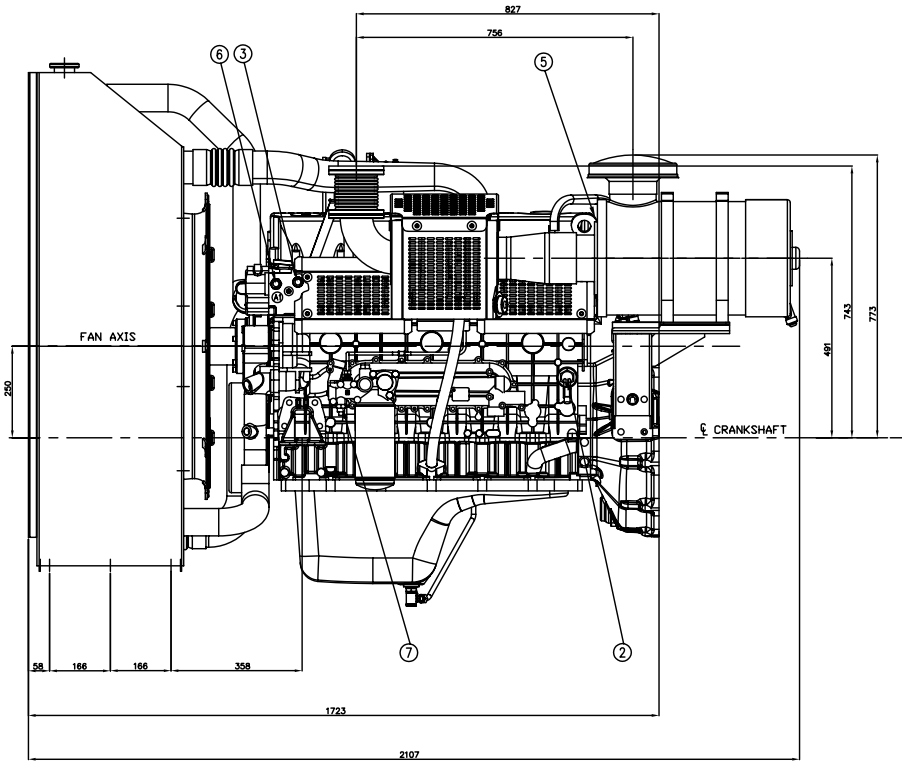

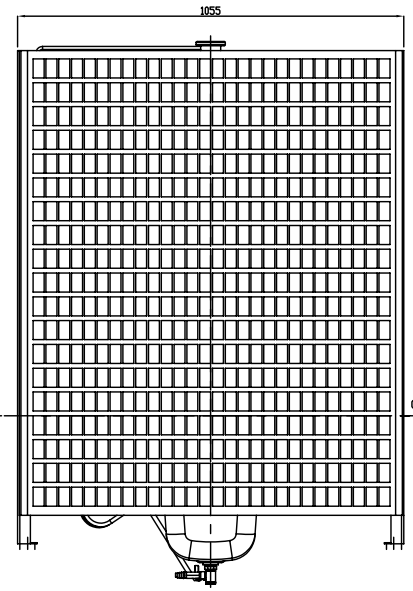

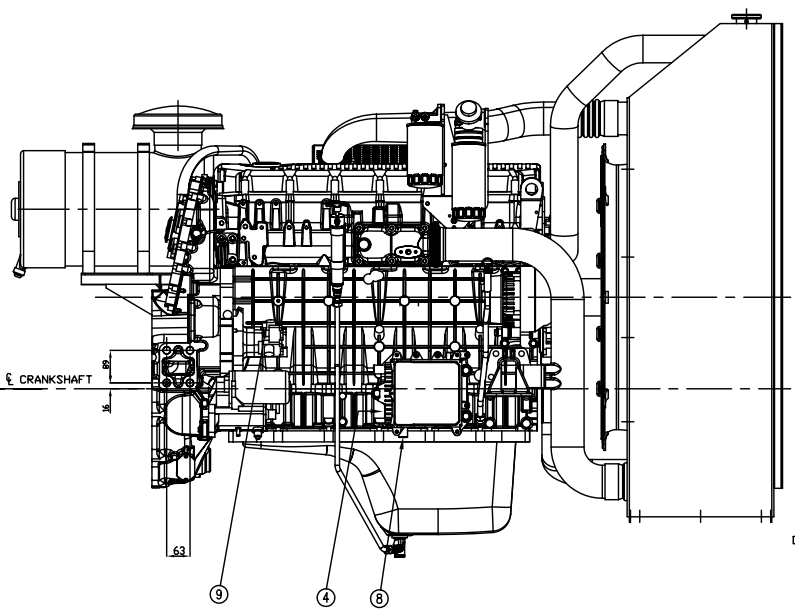

Pos.	Des.	Denomination
9	PIPE ø 8	Fuel return
8	PIPE ø 8	Fuel inlet
7	TBPO+TPO	Low oil pressure + Oil pressure
6	TATA+TTA	High water temperature + Water temperature
5	TIFA	Dust load indicator
4	EDC	EDC connector
3	TS	Water heater resistor switch
2	RS	Water heater resistor
1	TBLA	Low water level sensor

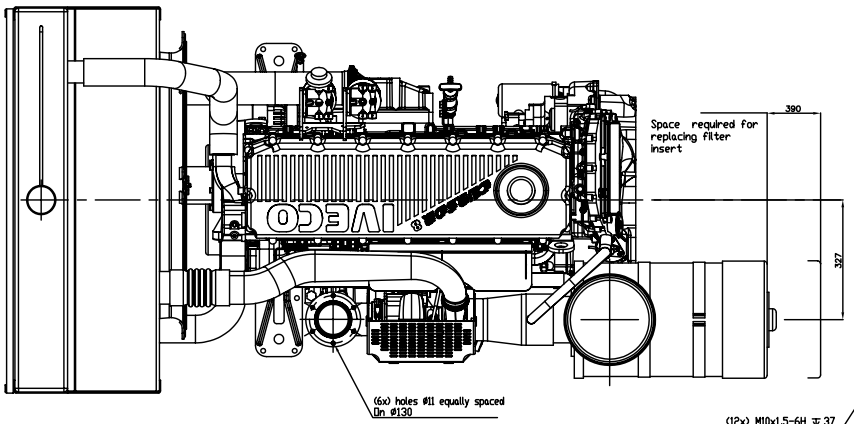

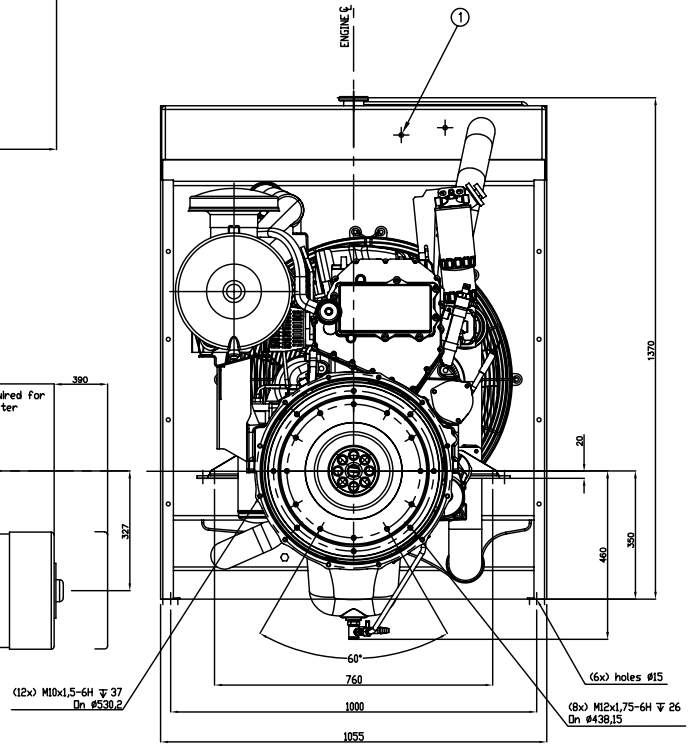

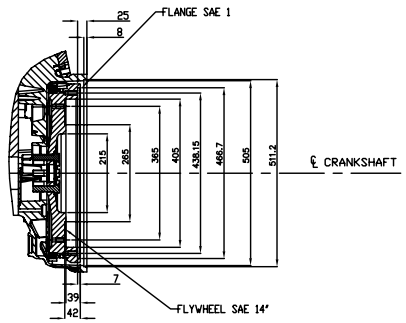

CAD DRAWING
HANDLING ON CAD SYSTEM ONLY

A1 Modificato posizionamento sensore TATA + TTA

STANDARDS richiesti/
richiesti/ed
richiesti

Scale 1/5
Scala
Massa
Data

Iveco 216
JB-992

Prescritto generali
Allgemeine Vorschriften
Prescriptions
Iveco 216, B-2999

ISO ø ITB
IT ø 30'
Ra ø 0.4

Materiale/Werkstoff/Material | Standards | Code No

Name (kg)
Nome
Masse
Sh. Grezzo
Rohteil-Nr.
Stock-No

Designazione/Benennung/Designation | Lexicon Code 184430

	Date	Name				
Drawn by	01/03/204	Del Giudice	A1	1-202A08-040-735	10/01/05	M.B.
Checked by		Prestoni	A0	1-202A08-089-735	02-03-04	DGM
Standards		Vitali	Indice Index	Modifica Modification	Data Date	Firma Name
Approved	E735	Agrosi	Indice Index	Modification Modification	Data Date	Firma Name

Schema Ingombro
Engine for Genset

Materiale/Modell/Model
CURSOR78TE2

IVECO
Iveco SpA

No
503111810 DA 62-9710

Sheet 1/1

Origine

Replaced for

Replaced by

Proprietà dell'Iveco SpA. Tutti i diritti sono riservati. Il presente documento non può essere copiato o ceduto a terzi senza il preventivo consenso scritto della società. Property of Iveco SpA. All rights reserved. No part of this document may be copied or disclosed to third parties without the written consent of Iveco SpA.

Alle Rechte vorbehalten. Jede Vervielfältigung, auch auszugsweise, bedarf der Genehmigung der Iveco SpA. Jede Weitergabe an Dritte ohne vorherige Genehmigung ist untersagt.

All intellectual rights reserved to Iveco SpA. Any reproduction, even in part, or any disclosure to third parties without written consent by Iveco SpA is forbidden.

Outdoor Indoor SVG